Dissociative Charge Exchange Processes in a Linear Electrostatic Trap; a route toward near state-controlled molecular ion interactions

S. Deng[*,1], C. R. Vane[1], M. E. Bannister[1], R. D. Thomas[2], and M. Fogle[3]

[1]Physics Division, Oak Ridge National Laboratory, Oak Ridge, TN 37831, USA
[2]Department of Physics, AlbaNova, Stockholm University, SE-106 91, Stockholm, Sweden
[3]Department of Physics, Auburn University, Auburn, AL

An experimental apparatus has been developed at the Oak Ridge National Laboratory Multi-Charged Ion Research Facility (ORNL MIRF) that enables stored cooling and state characterization of atomic and molecular ions of essentially any mass using a side-injected, 1.5 meter linear electrostatic mirror trap [1], shown schematically in Figure 1. Either a crossed electron beam target or an atomic/molecular beam target (with recoil ion detection) located in the field-free region of the trap, coupled with a position and time sensitive detector for product ion or neutral imaging, can be used for lifetime studies, measurements of 'in-trap' electron capture by stored ground- and metastable-state multiply-charged ions, or studies of dissociative interactions of internally cooled molecular ions. Results will be reported for dissociative charge exchange by CO^+ ions interacting with several atomic and molecular target species.

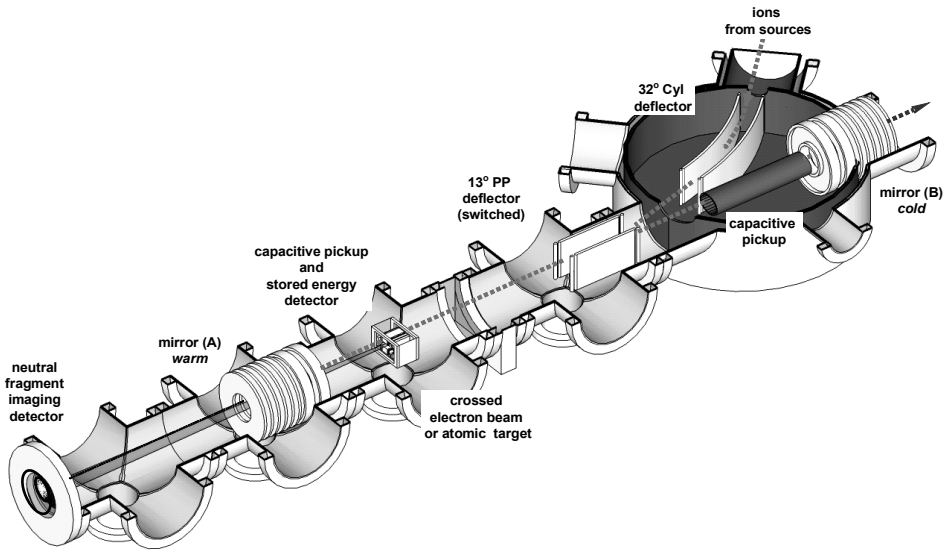

Figure 1. The ICCE Trap at the ORNL MIRF. Pulses of atomic or molecular ions up to 16 kV x Q from any of several available 'hot' and 'cold' sources enter from the top right and are injected into the linear trap through a set of 32° and 13° electrostatic deflectors. The ions oscillate between two electrostatic mirrors (A) and (B). Either a low-energy electron crossed beam target or an atomic target is mounted between the mirrors. A 78 mm diameter imaging detector is located ~ 1 m beyond mirror (A) for measurements of escaping interaction products.

References

[1] D. Zajfman, *et al.,* Phys. Rev. A **55**, R1577 (1997).